Calla Sconce, Small
Assembly Guide

Thank you for choosing In Common With. Please confirm that you received all of the components pictured in this guide, and reach out to us if anything is missing. It's rare, but it happens. We hope you enjoy your fixture. With proper care, it should last a lifetime.

Have questions? Please contact us at support@incommonwith.com.

CAUTION!
Electrical shock risk. Turn off electrical power at the main fuse box or circuit panel before beginning installation, servicing the light, or installing accessories. We recommend working with a qualified electrician familiar with the type of work you'd like done.

ATTENTION!
Risque de choc électrique. Coupez l'alimentation électrique au niveau de la boîte à fusibles principale ou du panneau de circuits avant de commencer l'installation, l'entretien de la lumière ou l'installation d'accessoires. Nous vous recommandons de travailler avec un électricien qualifié familier avec le type de travail que vous souhaitez effectuer.

Calla Sconce, Small with Mud-ring
Components

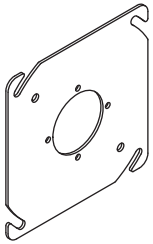

Backplate

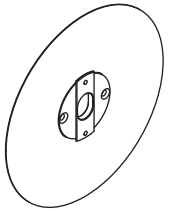

Mud Ring

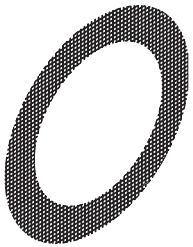

Mesh Tape

Mounting Bracket

Set Screw

Mounting Screw, Falt Head (2)

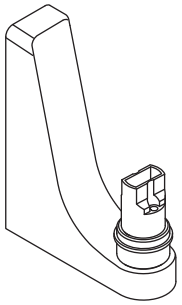

L Base

G9 Lightbulb, 4.5W

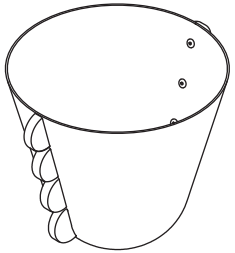

Calla Shade

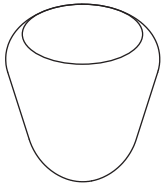

Diffuser

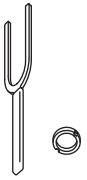

Tool + Washer

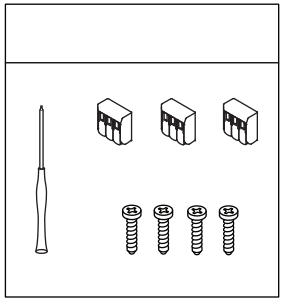

Hardware Pack

Step 1

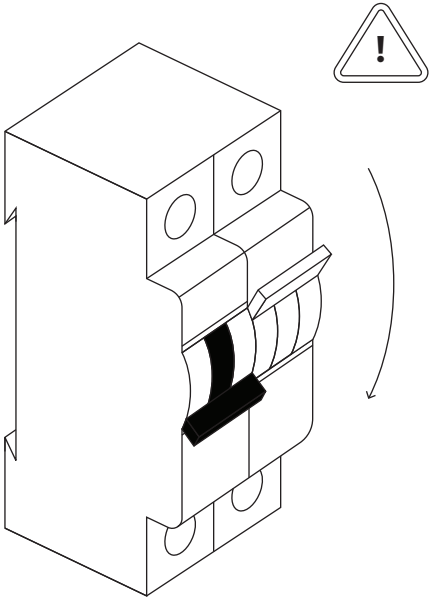

Turn off electrical power at the main fuse box or circuit panel before beginning installation.

Step 2

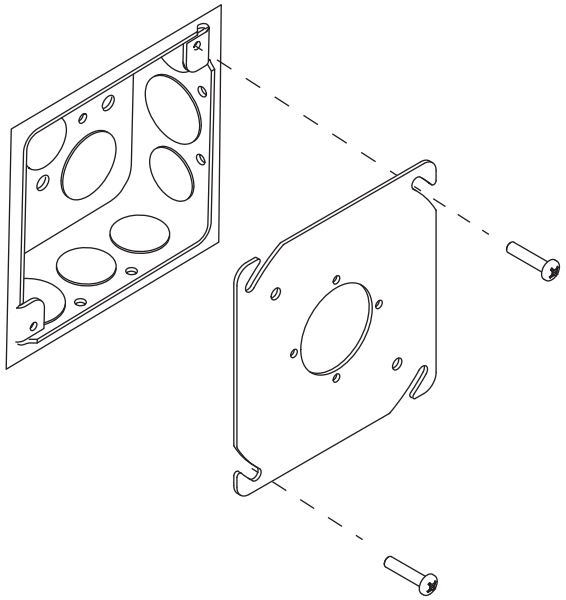

Mount the backplate to the junction box using a phillips head screwdriver to tighten two mounting screws. Make sure the wires from the junction box are still accessible.

Step 3

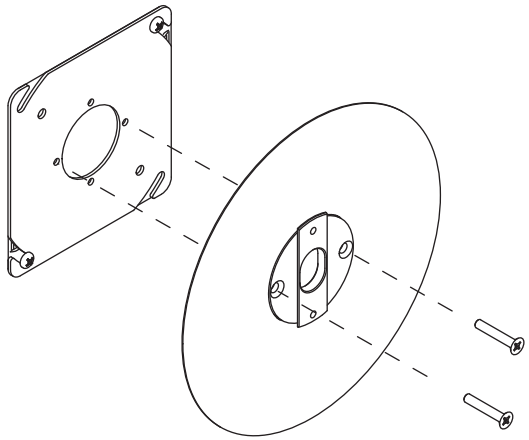

Mount the Mud-ring to the junction box using a phillips head screwdriver to tighten two mounting screws. Make sure the wires from the junction box are still accessible.

Step 4

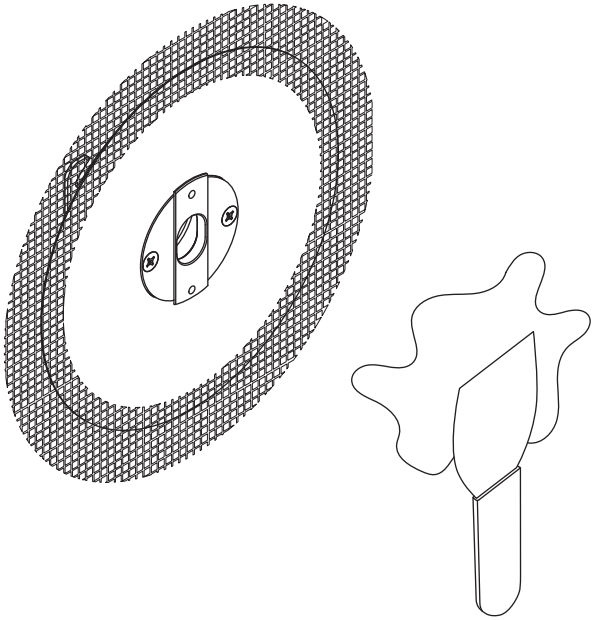

Apply drywall mesh tape, overlapping the perimeter of the mud ring and the wall. Plaster over drywall mesh-tape, mudring, and wall. We recommend applying three coats of plaster, allowing time for the plaster to dry and sanding between coats. Ensure this area painted before proceeding to the next steps.

Step 5

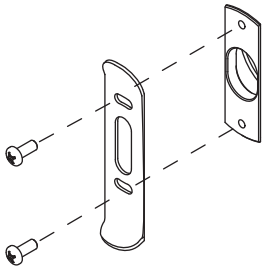

Attach the mounting bracket to the exposed part of the mudring using the additional mounting screws.

Step 6

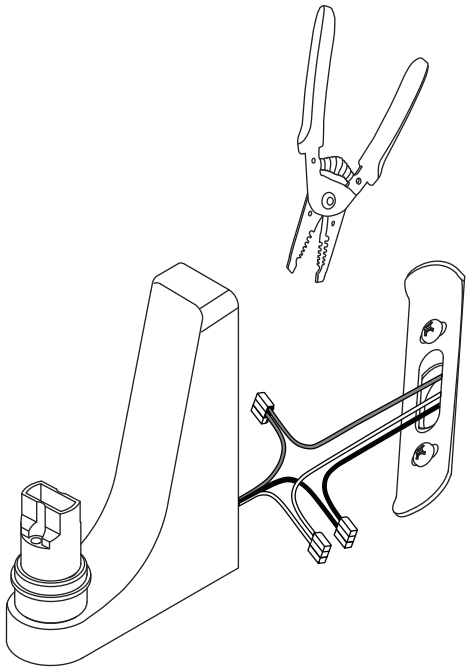

Use the wire nuts to connect the fixture's wires to the corresponding wires from the junction box in the wall or ceiling. White is neutral; Black is live; Green/ Yellow is ground. One ground wire will be attached to the backplate, the other ground wire should come from the junction box. If needed use a wire stripper to remove 3/8" of the insulation from each wire before inserting them into the corresponding wago clip.

Step 7

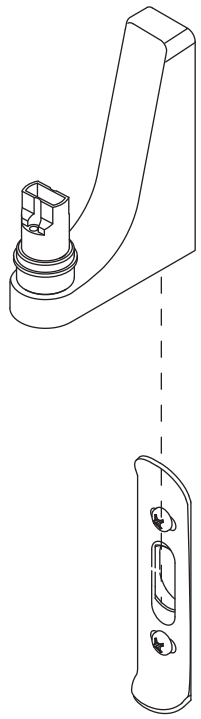

Slide the L base over the mounting bracket.

Step 8

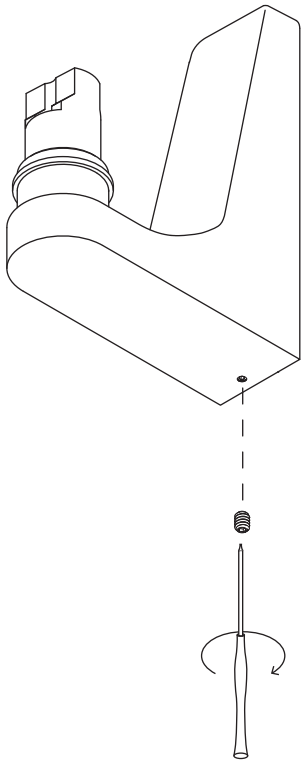

Secure using the provided base screws.

Step 9

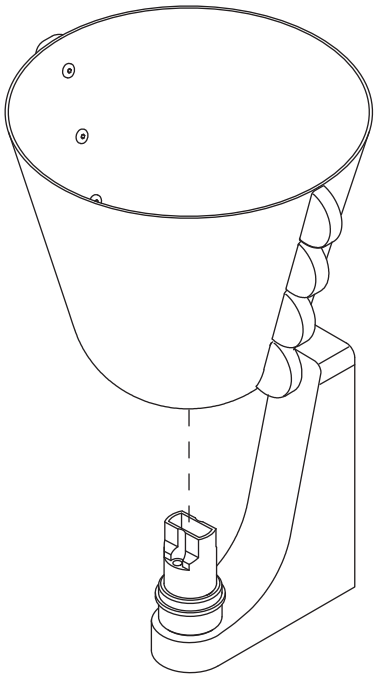

Carefully slide the Calla shade over the socket.

Step 10

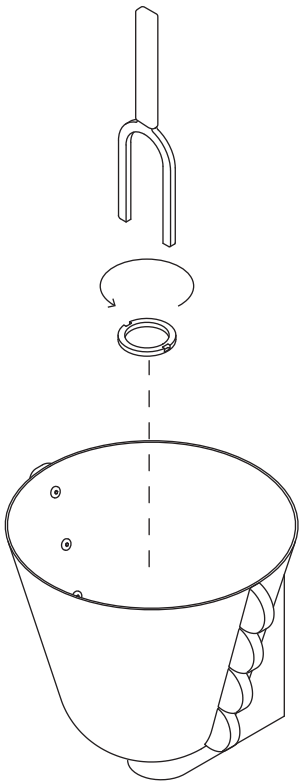

Secure the shade Into place using the washer and provided tool.

Step 11

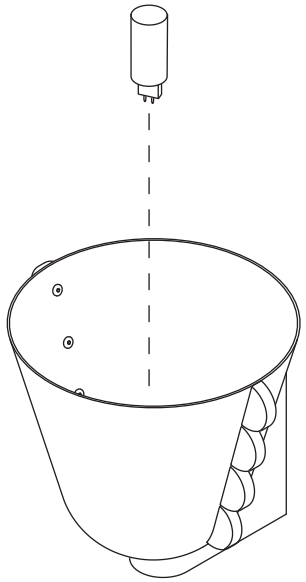

Push included bulb into socket.

Step 12

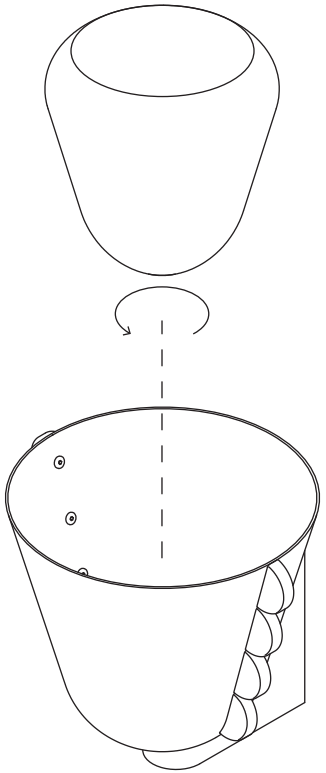

Thread the diffuser over the bulb.

Step 13

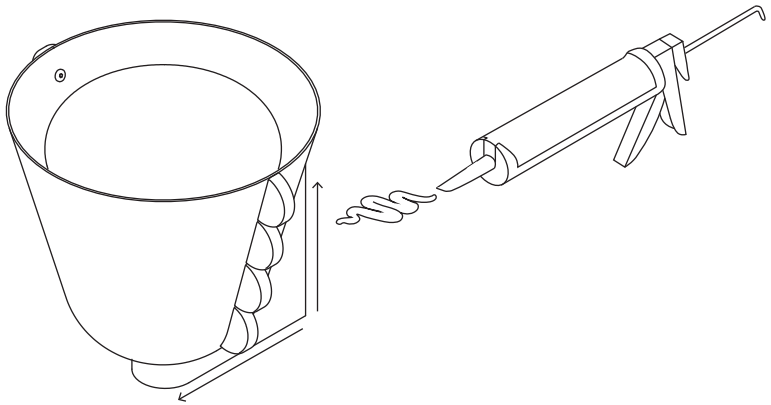

If assembling the Calla Sconce outdoors, first consult with a professional contractor to ensure proper installation. Once approved, carefully apply a bead of silicone caulk between the L- base and the outdoor wall from the top- down. First apply on one side, then on the other. The underside of the light should not be sealed to allow moisture to escape. Smooth the silicone around the light using your finger freshly dipped in a bowl of water.

Step 14

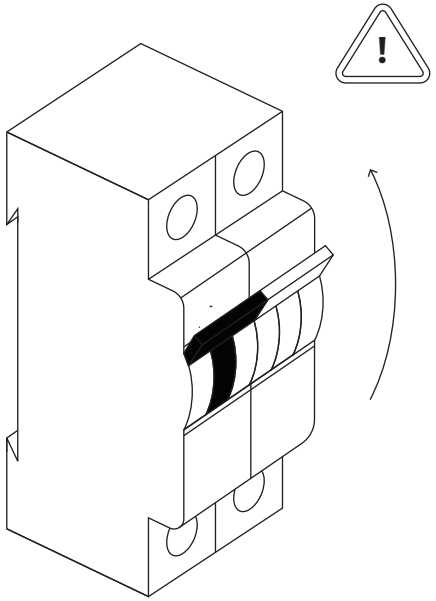

Turn the power back on at the main fuse box or circuit panel you disabled before installation. Turn on the light :)

Calla Sconce, Small with Backplate
Components

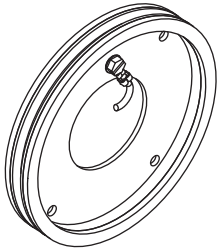

Backplate

Canopy Screws (2)

G9 Lightbulb, 4.5W

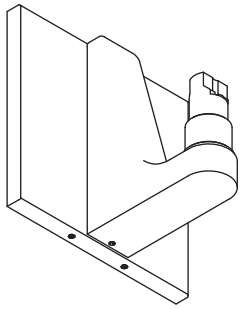

L Base with Backplate

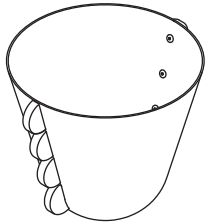

Calla Shade

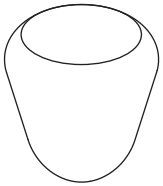

Diffuser

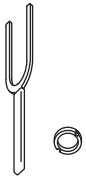

Tool + Washer

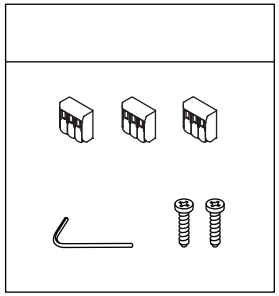

Hardware Pack

Step 1

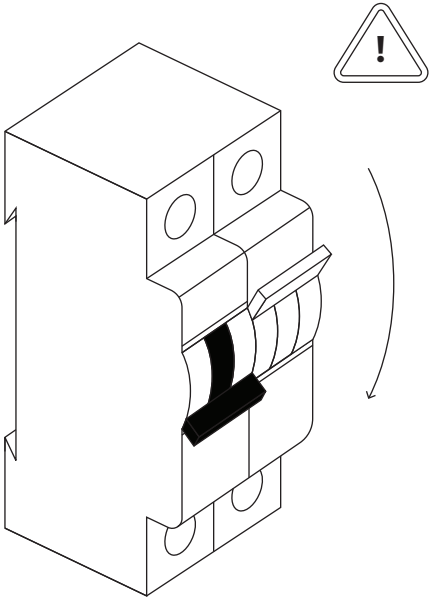

Turn off electrical power at the main fuse box or circuit panel before beginning installation.

Step 2

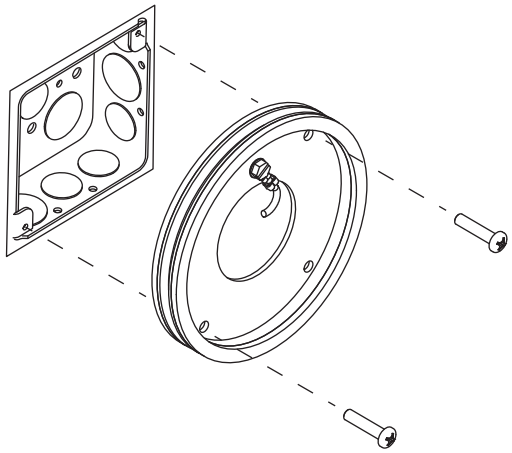

Mount the backplate to the junction box using a phillips head screwdriver to tighten two mounting screws. Make sure the wires from the junction box are still accessible.

Step 3

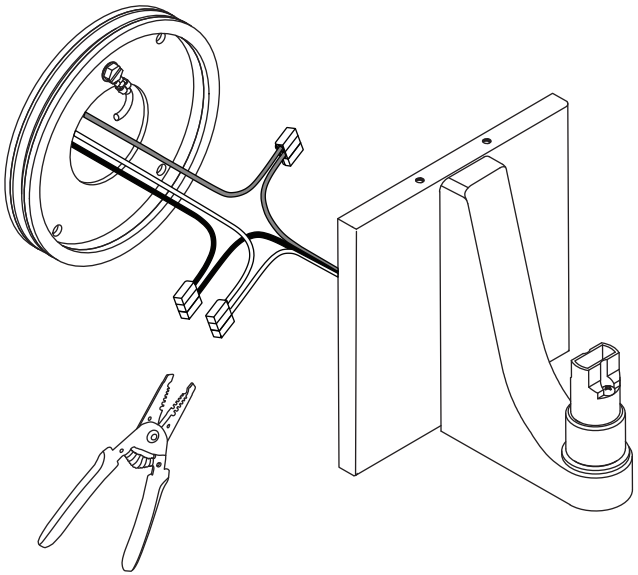

Use the wago clips to connect the fixture's wires to the corresponding wires from the junction box in the wall or ceiling. White is neutral; Black is live; Green/ Yellow is ground. One ground wire will be attached to the backplate, the other ground wire should come from the junction box. If needed use a wire stripper to remove 3/8" of the insulation from each wire before inserting them into the corresponding wago clip .

Step 4

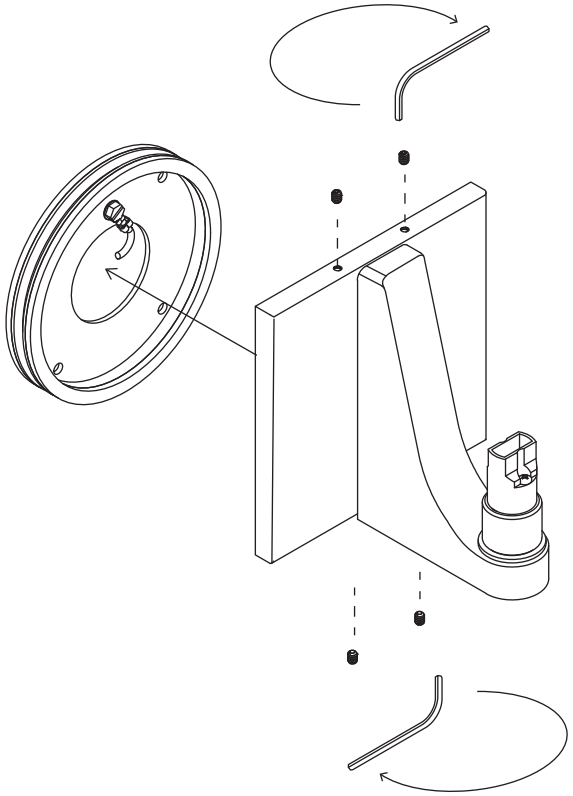

Align the the L Base over the backplate. Using the provided hex key, secure the L base into place by twisting in the set screws.

Step 5

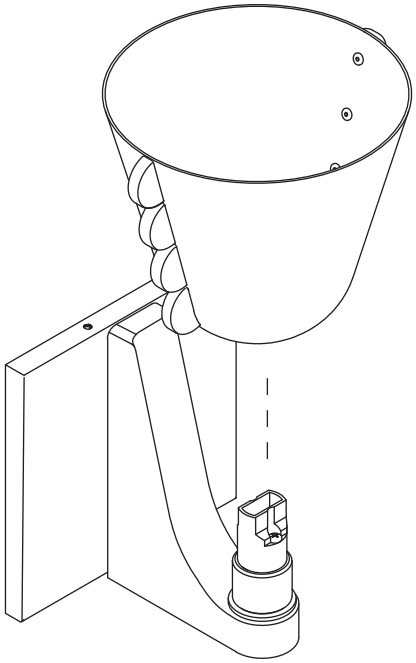

Carefully slide the Calla shade over the socket

Step 6

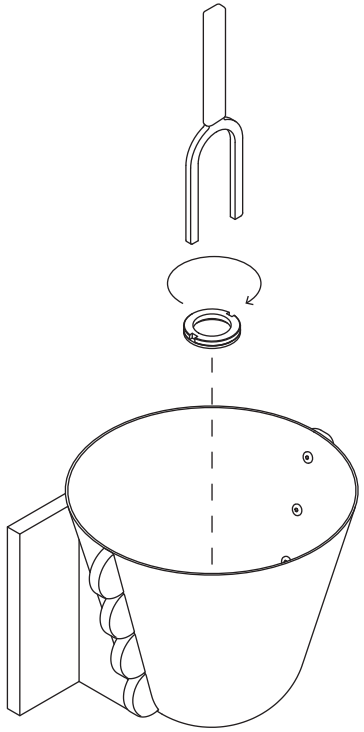

Secure the shade Into place using the washer and provided tool.

Step 7

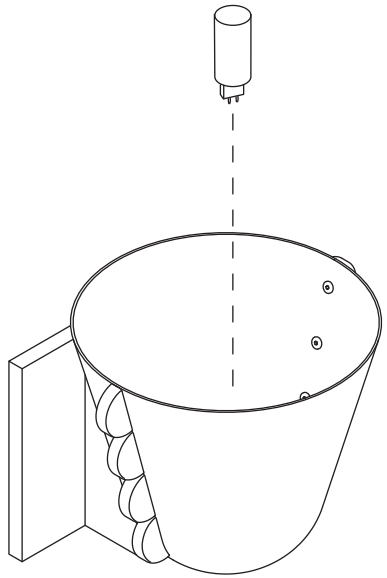

Push included bulb into socket.

Step 8

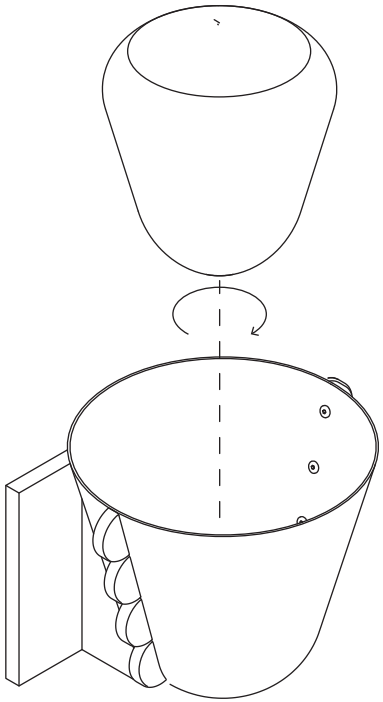

Thread the diffuser over the bulb.

Step 9

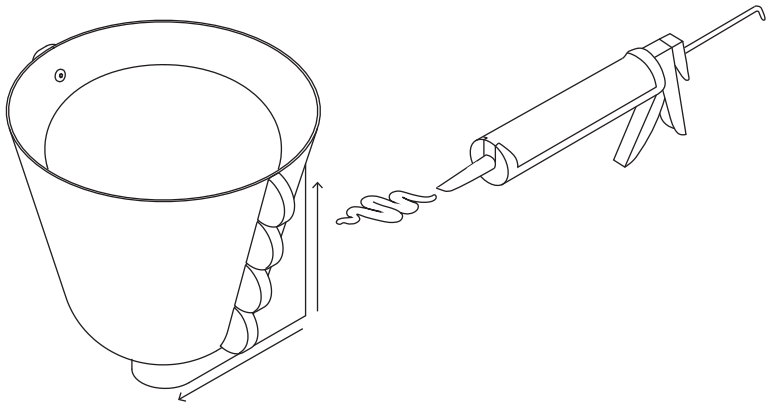

If assembling the Calla Sconce outdoors, carefully apply a bead of silicone caulk between the canopy cover and the outdoor wall from the top- down. First apply on one side, then on the other. The underside of the light should not be sealed to allow moisture to escape. Smooth the silicone around the light using your finger freshly dipped in a bowl of water.

Step 10

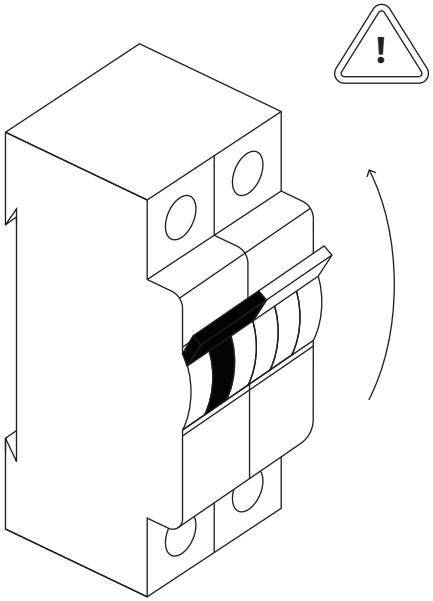

Turn the power back on at the main fuse box or circuit panel you disabled before installation. Turn on the light :)

Calla Sconce, Medium

Assembly Guide

Thank you for choosing In Common With. Please confirm that you received all of the components pictured in this guide, and reach out to us if anything is missing. It's rare, but it happens. We hope you enjoy your fixture. With proper care, it should last a lifetime.

Have questions? Please contact us at support@incommonwith.com.

CAUTION!
Electrical shock risk. Turn off electrical power at the main fuse box or circuit panel before beginning installation, servicing the light, or installing accessories. We recommend working with a qualified electrician familiar with the type of work you'd like done.

ATTENTION!
Risque de choc électrique. Coupez l'alimentation électrique au niveau de la boîte à fusibles principale ou du panneau de circuits avant de commencer l'installation, l'entretien de la lumière ou l'installation d'accessoires. Nous vous recommandons de travailler avec un électricien qualifié familier avec le type de travail que vous souhaitez effectuer.

Components

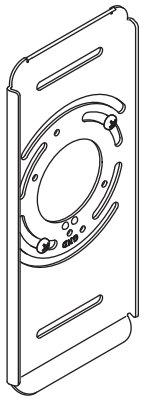

Backplate

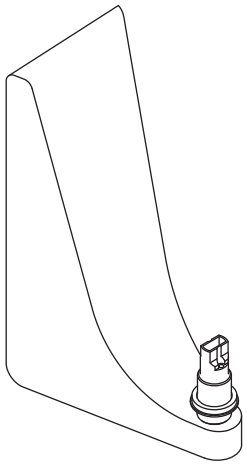

L Base, Medium

Mounting Screw (x2)

G9 Lightbulb, 7.0W

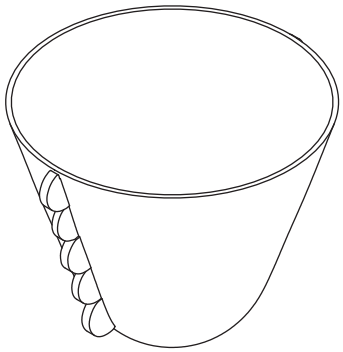

Calla Shade

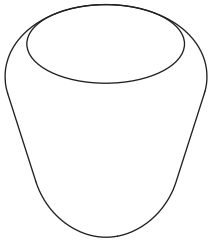

Diffuser

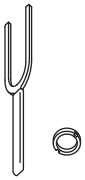

Tool + Washer

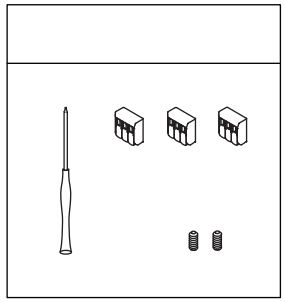

Harware Pack

Step 1

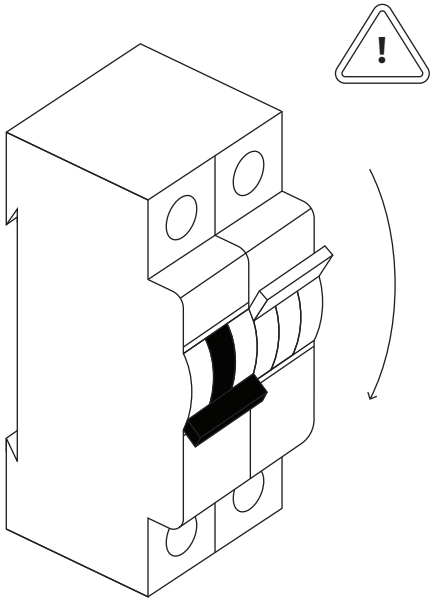

Turn off electrical power at the main fuse box or circuit panel before beginning installation.

Step 2

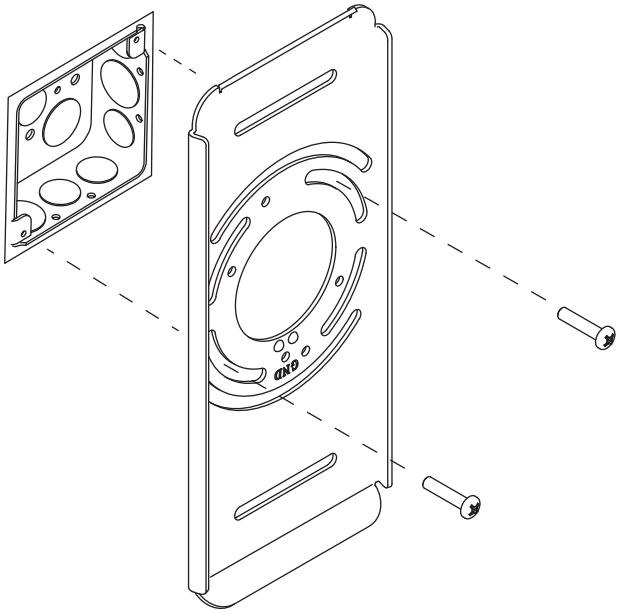

Mount the backplate to the junction box using a phillips head screwdriver to tighten two mounting screws. Make sure the wires from the junction box are still accessible.

Step 3

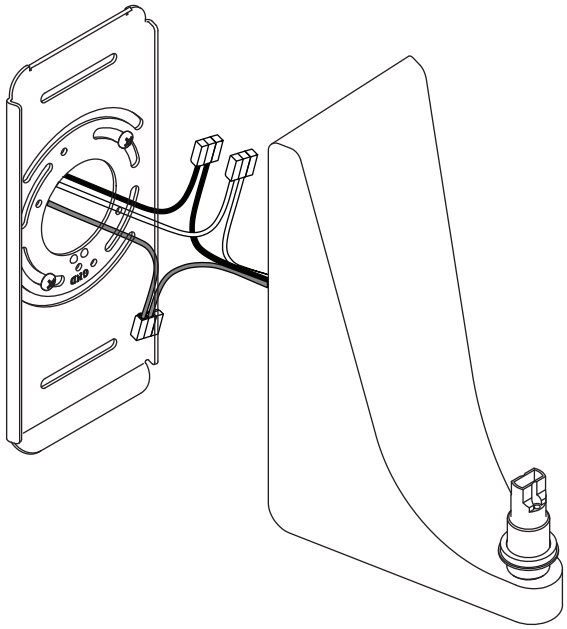

Use the wago clips to connect the fixture's wires to the corresponding wires from the junction box in the wall or ceiling. White is neutral; Black is live; Green/ Yellow is ground. One ground wire will be attached to the backplate, the other ground wire should come from the junction box. If needed use a wire stripper to remove 3/8" of the insulation from each wire before inserting them into the corresponding wago clip .

Step 4

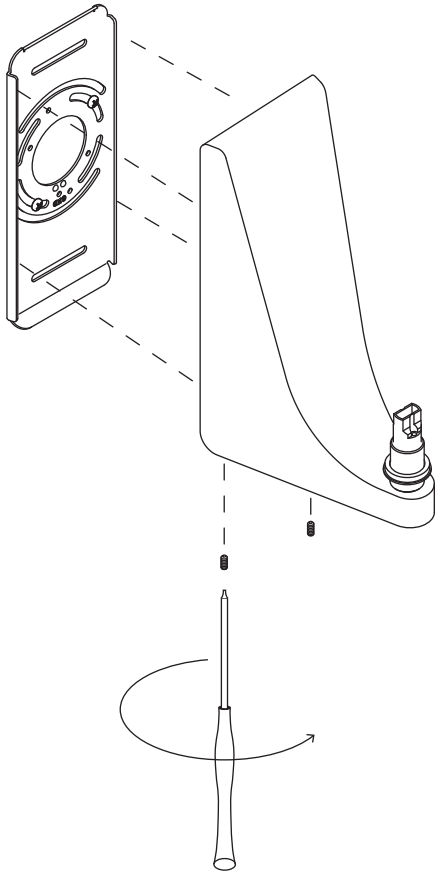

Place L Base over Backplate. Secure using provided base screws.

Step 5

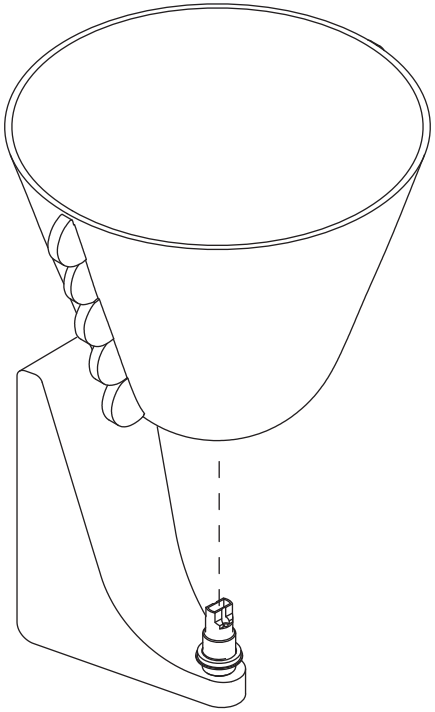

Carefully slide the Calla shade over the socket.

Step 6

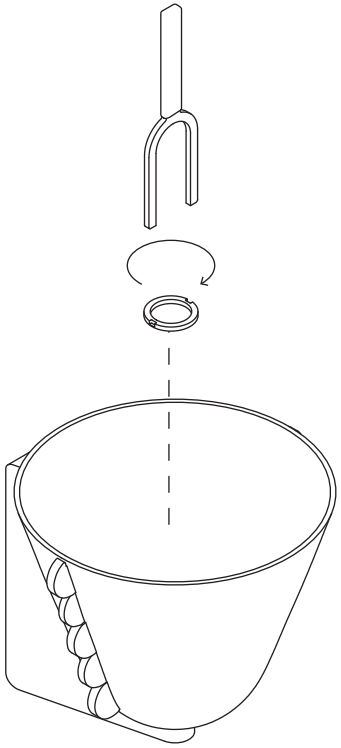

Secure the shade Into place using the washer and provided tool.

Step 7

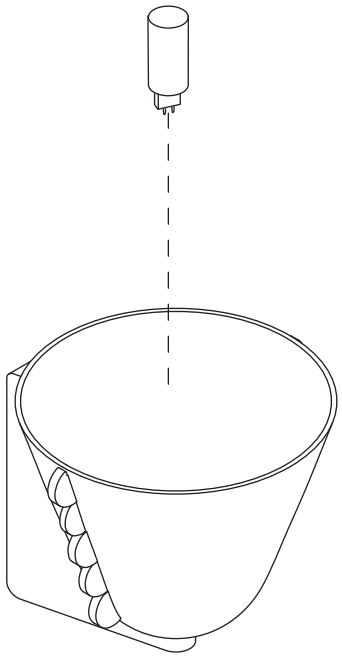

Push included bulb into socket.

Step 8

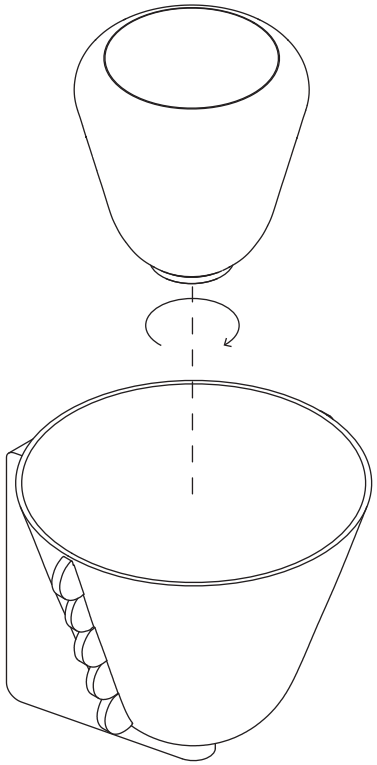

Thread the diffuser over the bulb.

Step 9

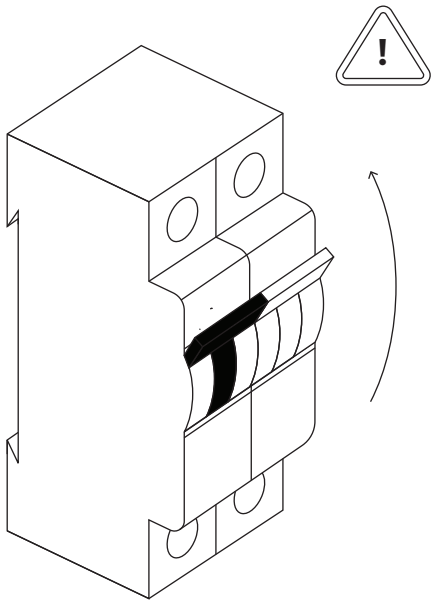

Turn the power back on at the main fuse box or circuit panel you disabled before installation. Turn on the light :)

Never use scouring pads or abrasive cleaning solutions. If it comes in a bottle, it is bad for your fixture. Instead, we recommend using soft microfiber cloths, which are gentler on our products and the planet.

For Metal: Wipe with a damp or dry microfiber cloth. Please note that our brass is unlaquered, and will darken naturally over time.

For Glass: Wipe clear or colored glass with a damp microfiber cloth. For sandblasted or etched glass, use a dry microfiber cloth. Removable glass shades can be washed carefully in a sink using warm or hot water.

For Ceramic: Wipe with a damp microfiber cloth. Do not submerge in water.

Return Policy

We accept returns for store credit only, minus a 15% restocking fee. We do not accept returns on pieces from the Handmade, Disc, Terra, or Flora series, on the Ceramic or Colored Glass Up Down Sconces, or on items that are not in their original condition. Custom and Rush orders are final sale. Please note that shipping charges are non-refundable.

To request a return, email sales@incommonwith.com within ten days of receiving your order. Requests must be approved before a return can be processed. Requests made after ten days will not be accepted.

All products that come in their own box, including but not limited to light bulbs and accessories, must be returned in their original, undamaged box as this is considered part of the product. Once installed, products are no longer eligible for return.

We reserve the right to reject any returned items that do not meet the above requirements. If your return is rejected you will be notified via email.