Eave Table Lamp
Assembly Guide

Thank you for choosing In Common With. Please confirm that you received all of the components pictured in this guide, and reach out to us if anything is missing. It's rare, but it happens. We hope you enjoy your fixture. With proper care, it should last a lifetime.

Have questions? Please contact us at support@incommonwith.com.

CAUTION!
As a safety feature, this lamp has a polarized plug to reduce the risk of electric shock. This means it has two flat prongs and a third circular prong underneath, and it will fit in an outlet one way only. If the plug does not fit fully and easily into the outlet, do not force it; contact a qualified electrician.

ATTENTION!
Par mesure de sécurité, cette lampe a une fiche polarisée pour réduire le risque de choc électrique. Cela signifie qu'il a deux broches plates et une troisième broche circulaire en dessous, et qu'il ne s'insère dans une prise que dans un seul sens. Si la fiche ne s'insère pas complètement et facilement dans la prise, ne la forcez pas; contactez un électricien qualifié.

Components

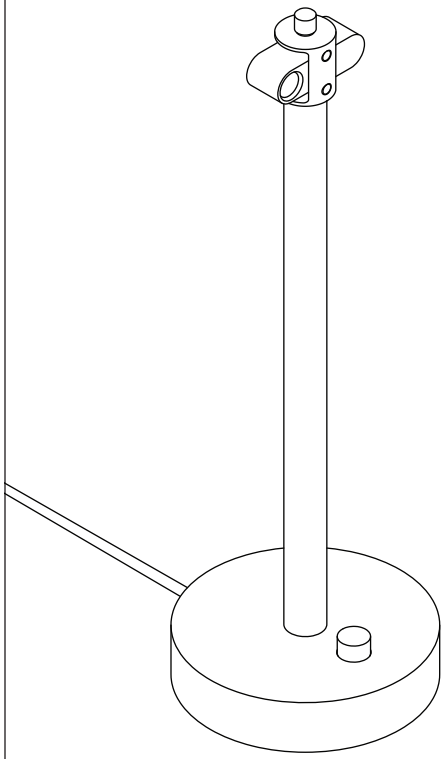

Standard Table Base

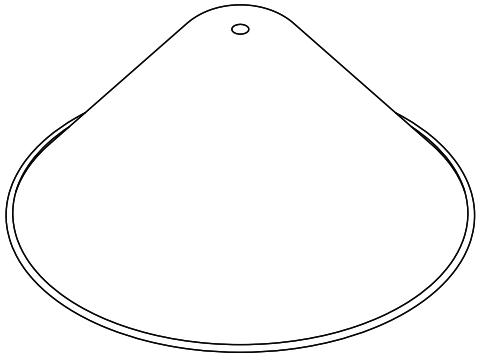

Eave Shade

Type A Cap

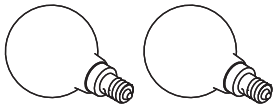

E12 Tala Sphere I Bulb (2)

3” Stem

Step 1

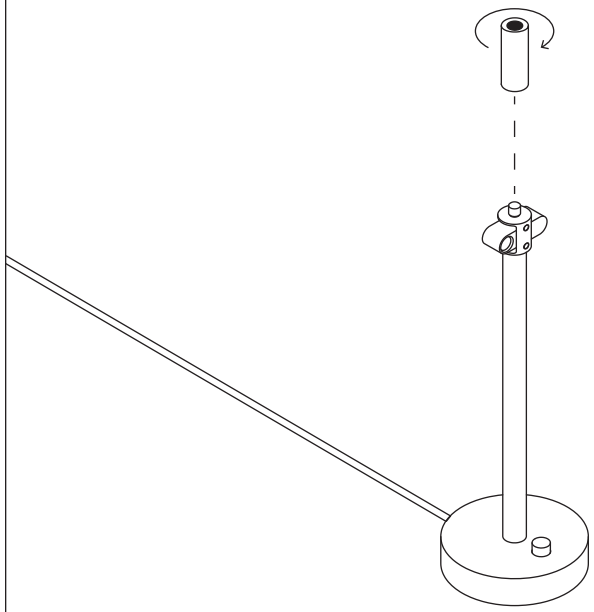

Attach the 3-inch Stem to the Standard Table Base by rotating it clockwise.

(For the table mounted version, please follow the instructions after step 4.)

Step 2

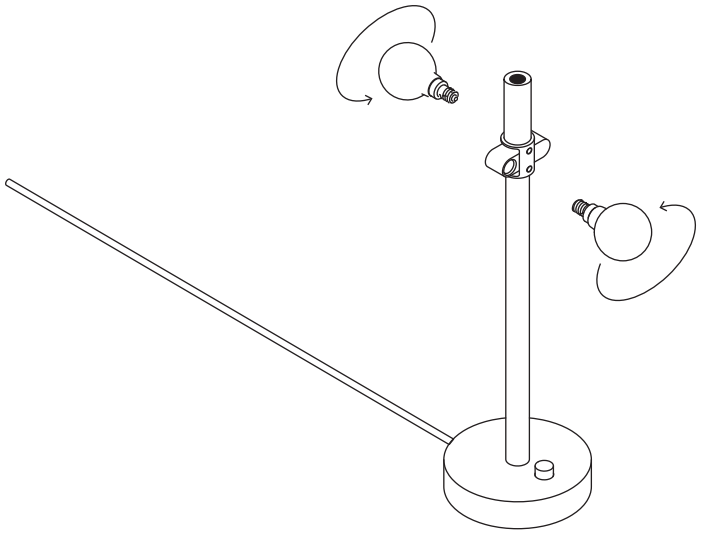

Screw the included lightbulbs into the fixture sockets.

Step 3

Attach the shade to the lamp base by aligning the hole in the shade with the hole in the stem. Screw the Type A Cap through the hole in the shade and into the threaded hole at the stem's top and rotate clockwise until secure.

Step 4

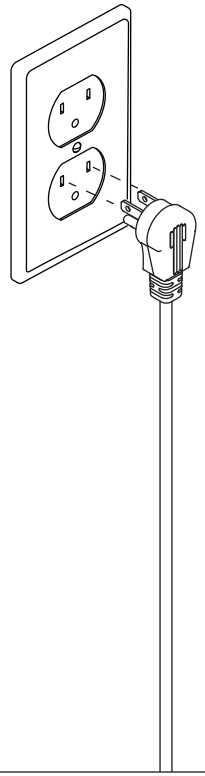

Plug in the cord and turn on the light.

Components

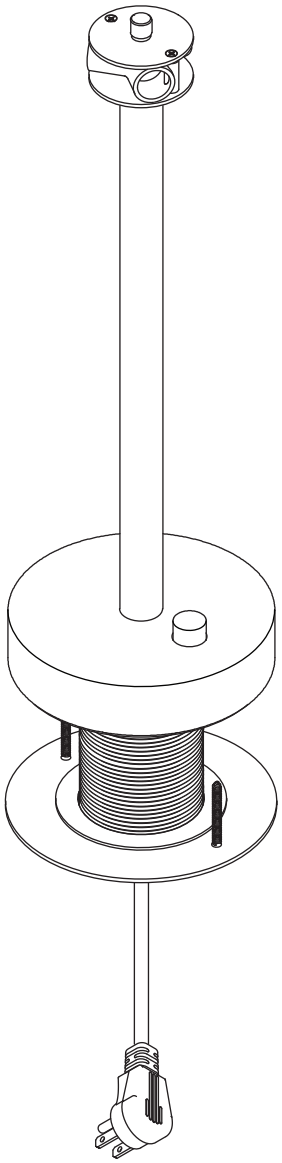

Standard Table Mount

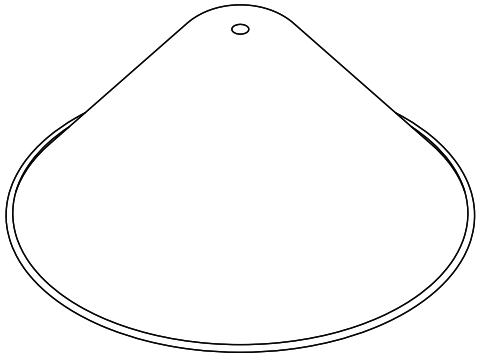

Eave Shade

Type A Cap

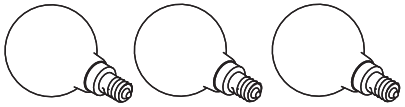

E12 Tala Porcelain I Lightbulb (3)

3” Stem

Step 1

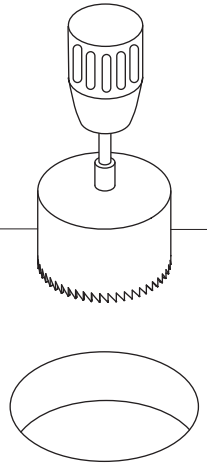

Drill out a 2 ½” diameter hole to fit the threaded base column.

Step 2

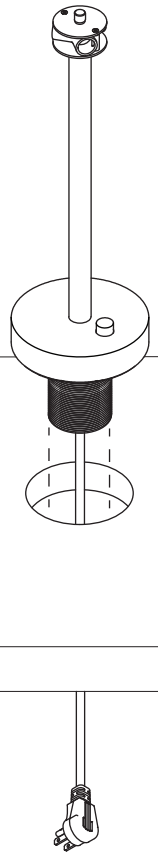

Unscrew the base plate from the threaded column. Gently insert the table mount into the table.

Step 3

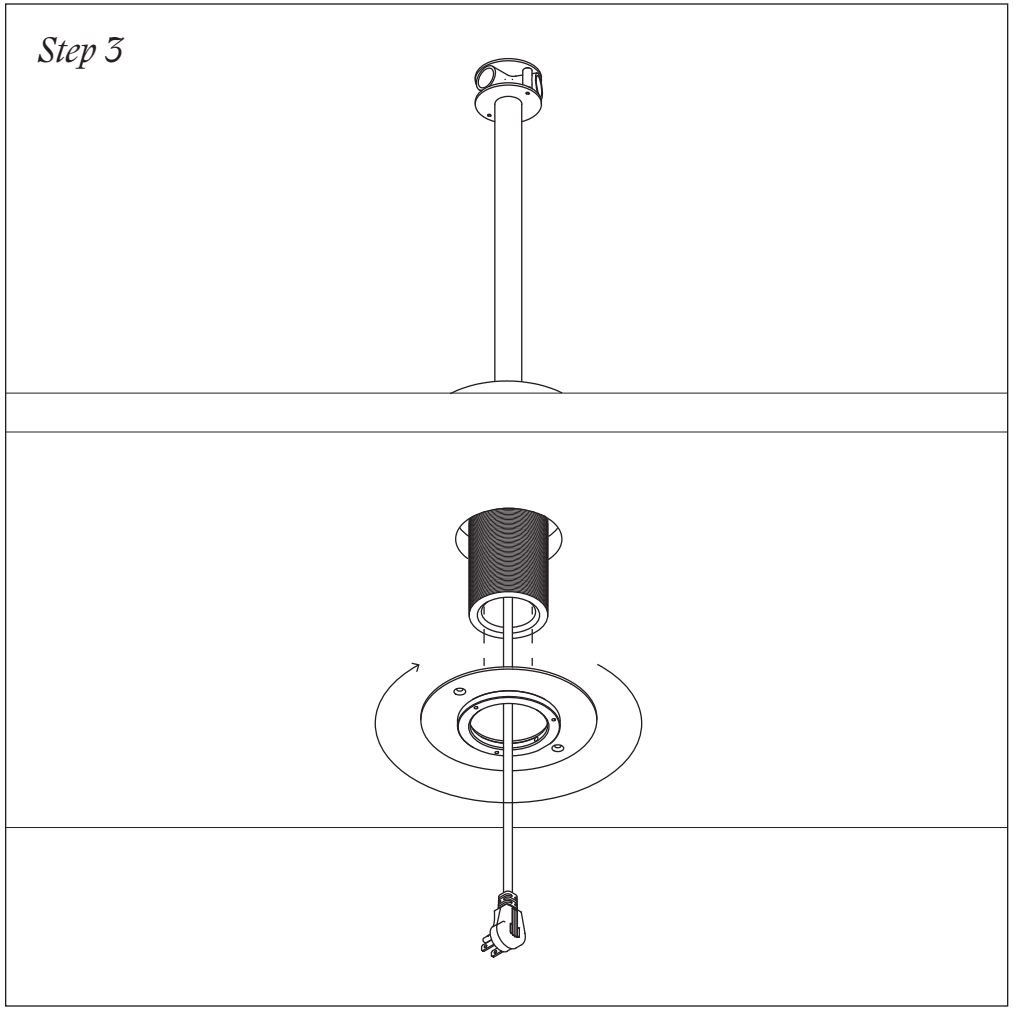

Rotating clockwise, secure the base plate onto the base column until it reaches the desired height.

Step 4

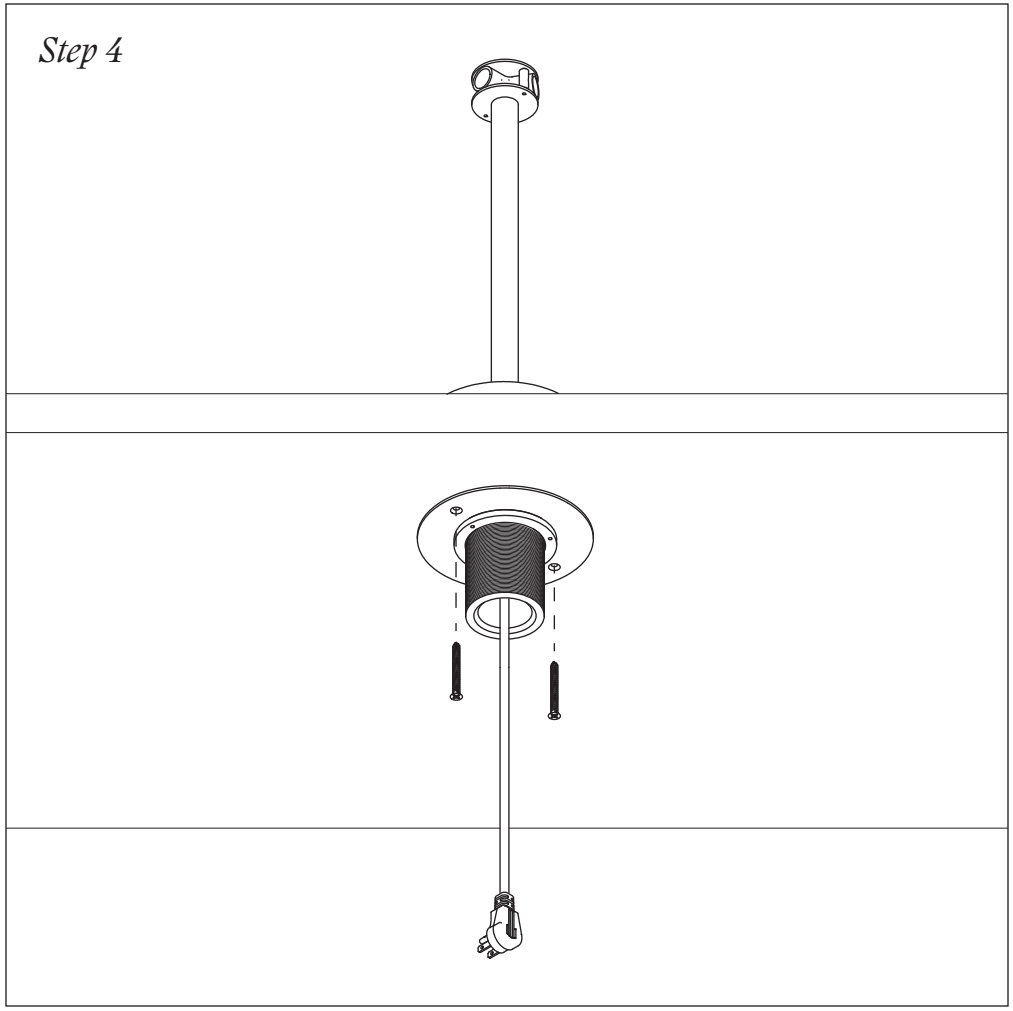

Secure the base plate onto the underside of the table by using the screws provided or screws that are appropriate for the surface.

Step 5

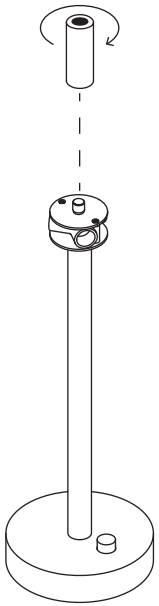

Attach the 3-inch Stem to the Standard Table Base by rotating it clockwise.

Step 6

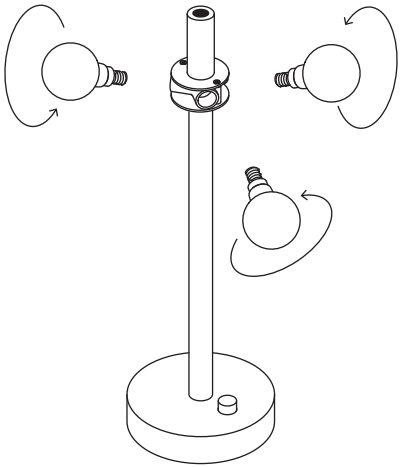

Screw the included lightbulbs into the fixture sockets.

Step 7

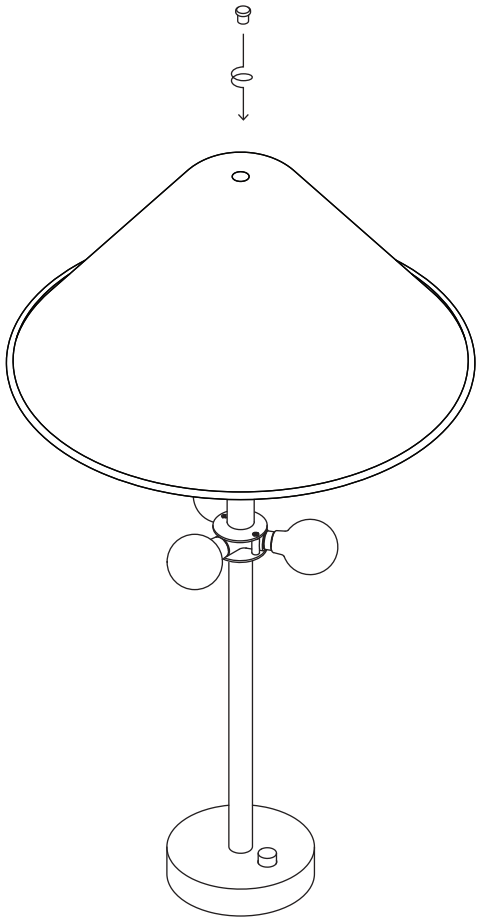

Attach the shade to the lamp base by aligning the hole in the shade with the hole in the stem. Screw the Type A Cap through the hole in the shade and into the threaded hole at the stem's top and rotate clockwise until secure.

Step 8

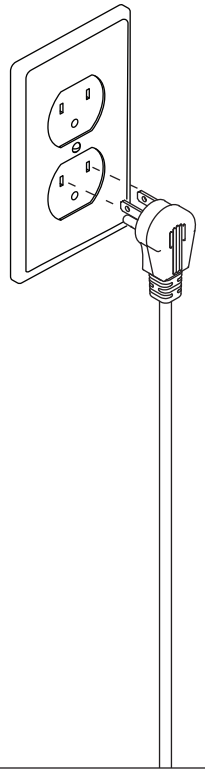

Plug in the cord and turn on the light.

Never use scouring pads or abrasive cleaning solutions. If it comes in a bottle, it is bad for your fixture. Instead, we recommend using soft microfiber cloths, which are gentler on our products and the planet.

For Metal: Wipe with a damp or dry microfiber cloth. Please note that our brass is unlaquered, and will darken naturally over time.

For Glass: Wipe clear or colored glass with a damp microfiber cloth. For sandblasted or etched glass, use a dry microfiber cloth. Removable glass shades can be washed carefully in a sink using warm or hot water.

For Ceramic: Wipe with a damp microfiber cloth. Do not submerge in water.

Return Policy

We accept returns for store credit only, minus a 15% restocking fee. We do not accept returns on pieces from the Handmade, Disc, Terra, or Flora series, on the Ceramic or Chromatic Glass Up Down Sconces, or on items that are not in their original condition. Custom and Rush orders are final sale. Please note that shipping charges are non-refundable.

To request a return, email sales@incommonwith.com within ten days of receiving your order. Requests must be approved before a return can be processed. Requests made after ten days will not be accepted.

All products that come in their own box, including but not limited to light bulbs and accessories, must be returned in their original, undamaged box as this is considered part of the product. Once installed, products are no longer eligible for return.

We reserve the right to reject any returned items that do not meet the above requirements. If your return is rejected you will be notified via email.