Up Down Sconce

Assembly Guide

Thank you for choosing In Common With. Please confirm that you received all of the components pictured in this guide, and reach out to us if anything is missing. It's rare, but it happens. We hope you enjoy your fixture. With proper care, it should last a lifetime.

Have questions? Please contact us at support@incommonwith.com.

CAUTION!
Electrical shock risk. Turn off electrical power at the main fuse box or circuit panel before beginning installation, servicing the light, or installing accessories. We recommend working with a qualified electrician familiar with the type of work you'd like done.

As a safety feature, this lamp has a polarized plug to reduce the risk of electric shock. This means it has two flat prongs and a third circular prong underneath, and it will fit in an outlet one way only. If the plug does not fit fully and easily into the outlet, do not force it; contact a qualified electrician.

ATTENTION!
Par mesure de sécurité, cette lampe a une fiche polarisée pour réduire le risque de choc électrique. Cela signifie qu'il a deux broches plates et une troisième broche circulaire en dessous, et qu'il ne s'insère dans une prise que dans un seul sens. Si la fiche ne s'insère pas complètement et facilement dans la prise, ne la forcez pas; contactez un électricien qualifié.

Risque de choc électrique. Coupez l'alimentation électrique au niveau de la boîte à fusibles principale ou du panneau de circuits avant de commencer l'installation, l'entretien de la lumière ou l'installation d'accessoires. Nous vous recommandons de travailler avec un électricien qualifié familier avec le type de travail que vous souhaitez effectuer.

Up Down Sconce
Components

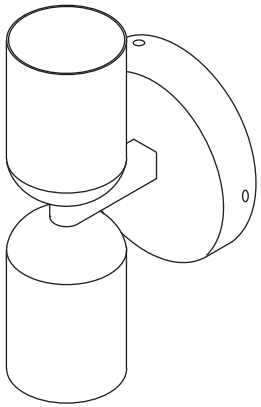

Up Down Sconce Assembly

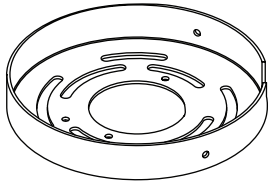

Canopy Backplate

Thumb Screws (3)

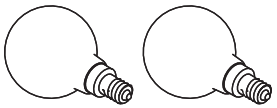

E12 Tala Porcelain I Lightbulb (2)

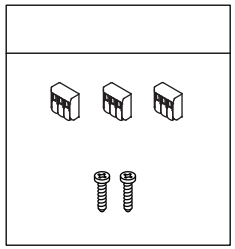

Hardware Pack

Step 1

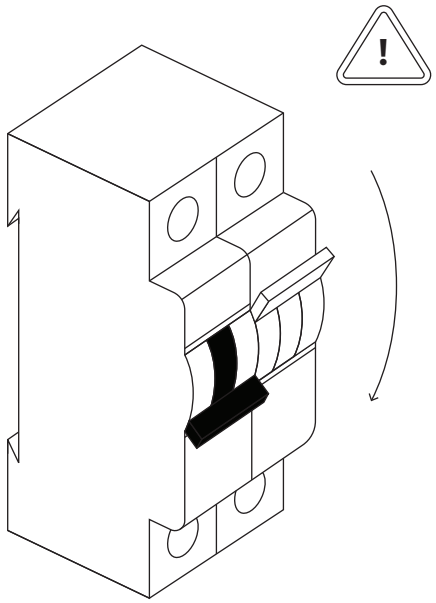

Before beginning installation, turn off electrical power at the main fuse box or circuit panel.

Step 2

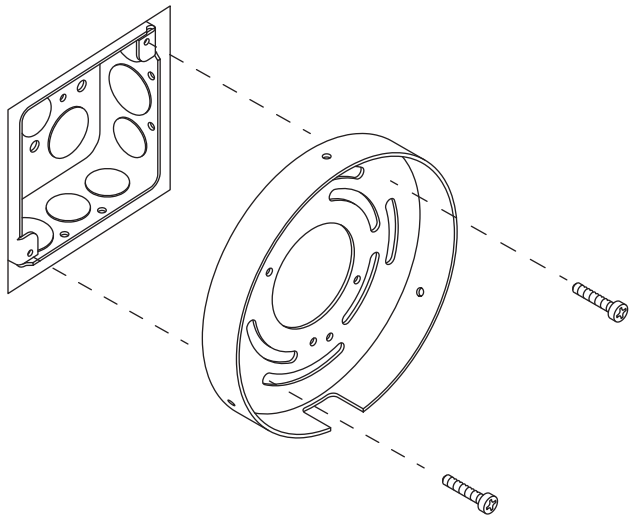

Mount the backplate to the junction box using a phillips head screwdriver to tighten the mounting screws.

Step 3

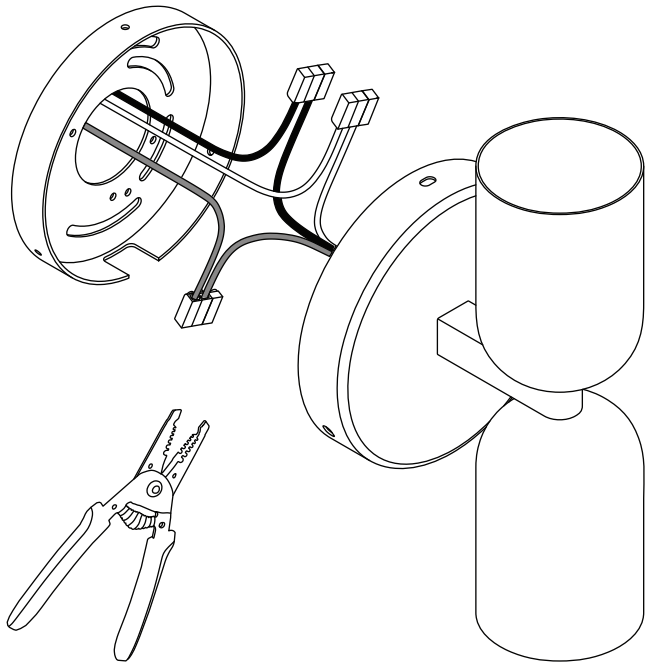

Use the wago clips to connect the fixtures wires to the corresponding wires from the junction box in the wall or ceiling. White is neutral; Black is live; Green/Yellow is ground. One ground wire will be from the canopy backplate, and the other ground wire(s) should come from the junction box. If needed, use a wire stripper to remove 3/8” insulation from each wire before inserting them into the corresponding wago clip.

Step 4

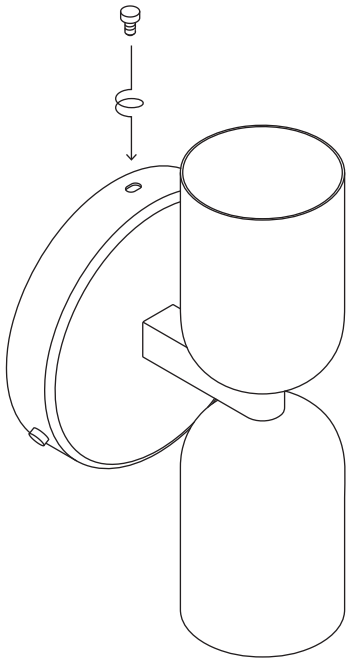

Align the holes of the backplate with the holes of the canopy cover. Secure them in place by twisting the thumbscrews by hand.

Step 5

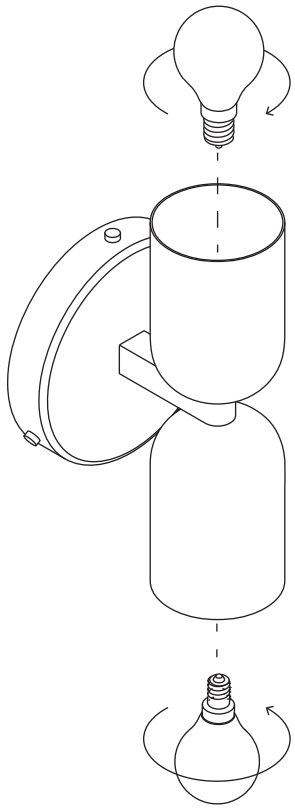

Screw the lightbulbs into the sockets.

Step 6

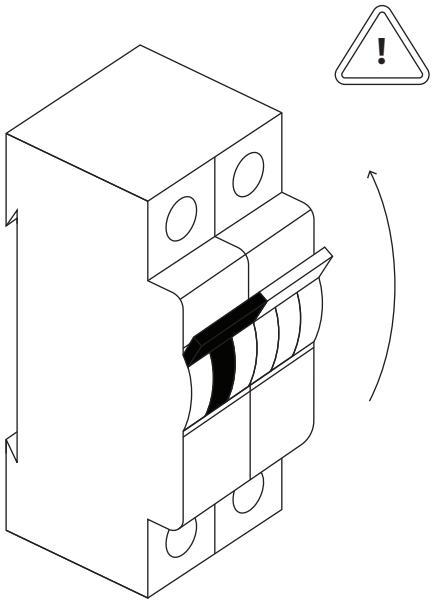

Turn the power back on at the main fuse box or circuit panel you disabled before installation. Turn on the light :)

Up Down Sconce, Plug-in
Components

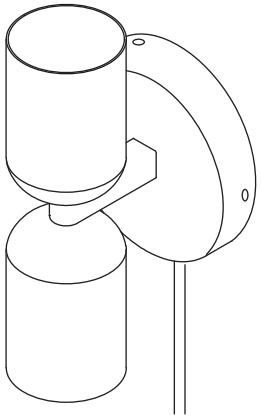

Up Down Sconce, Plug-in Assembly

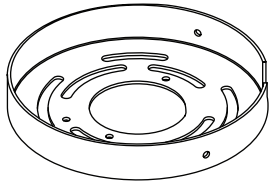

Canopy Backplate

Thumb Screws (3)

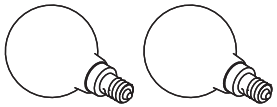

E12 Tala Porcelain I Lightbulb (2)

Step 1

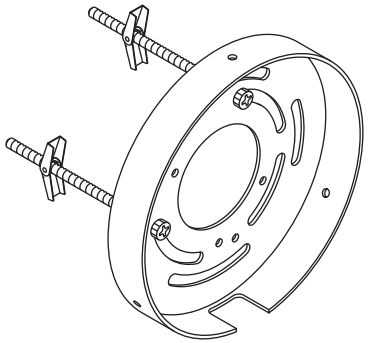

Mount the canopy backplate to the wall using anchors appropriate for your wall material (not provided). Consult a qualified professional if needed.

Step 2

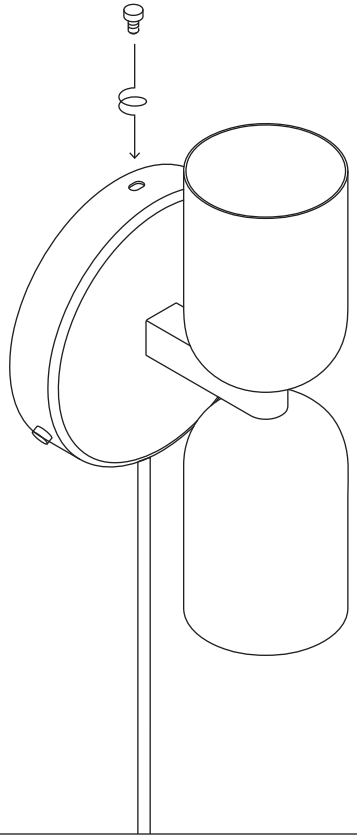

Align the holes of the backplate with the holes of the canopy cover. Secure them in place by twisting the thumbscrews by hand.

Step 3

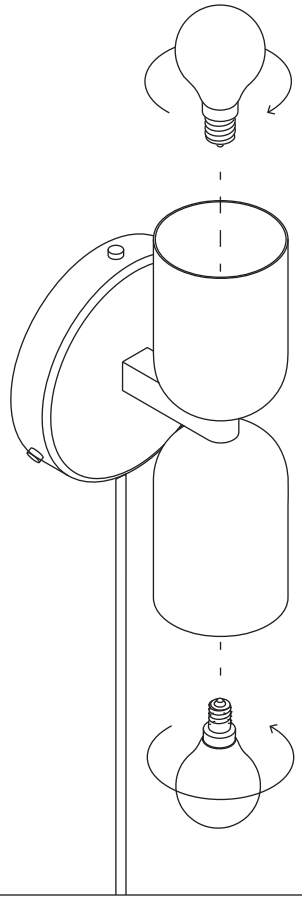

Screw the lightbulbs into the sockets.

Step 4

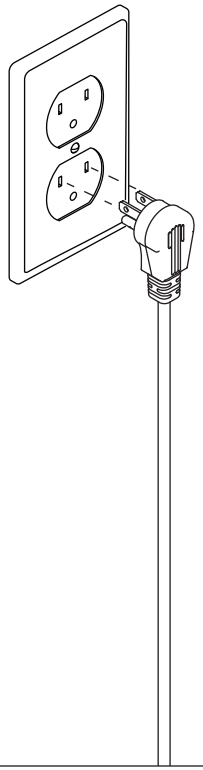

Plug in the cord and turn on the light.

Up Down Sconce, Slim
Components

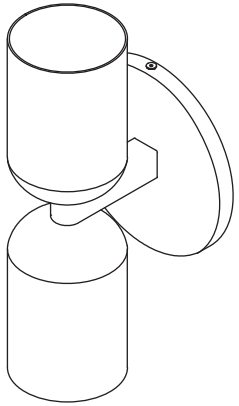

Up Down Sconce, Slim Assembly

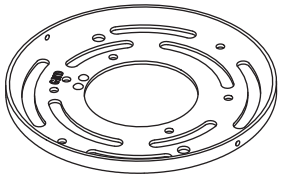

Slim Canopy Backplate

Canopy Screws (2)

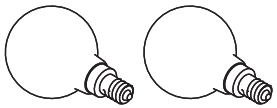

E12 Tala Porcelain I Lightbulb (2)

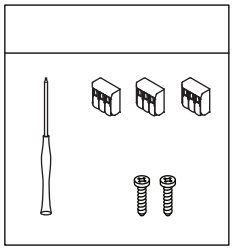

Hardware Pack

Step 1

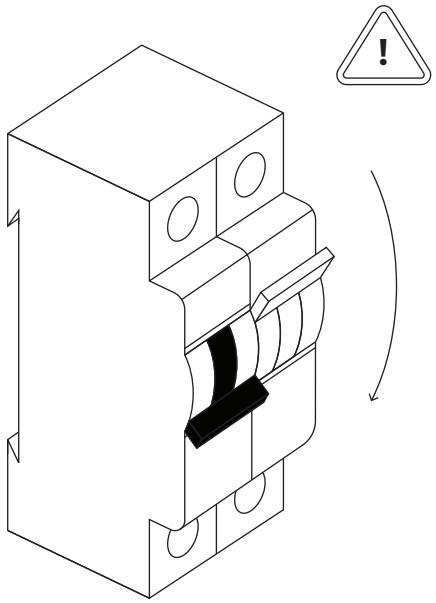

Before beginning installation, turn off electrical power at the main fuse box or circuit panel.

Step 2

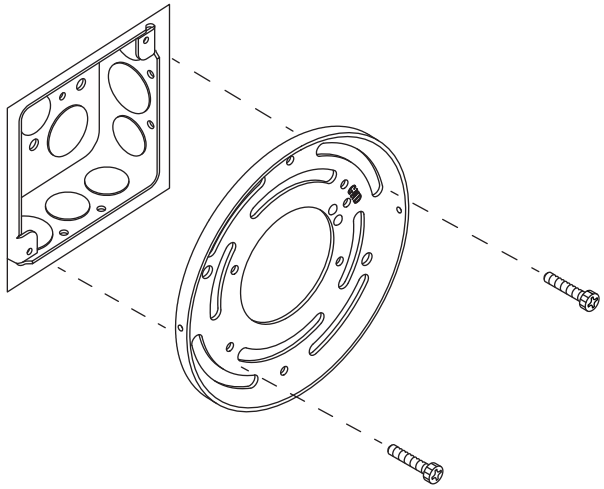

Mount the backplate to the junction box using a Phillips head screwdriver to tighten the mounting screws.

Step 3

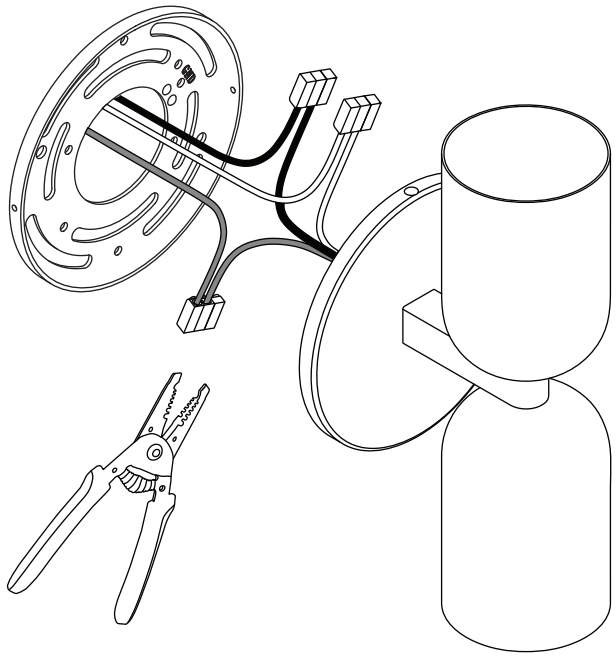

Use the wago clips to connect the fixtures wires to the corresponding wires from the junction box in the wall or ceiling. White is neutral; Black is live; Green/Yellow is ground. One ground wire will be from the canopy backplate, and the other ground wire(s) should come from the junction box. If needed, use a wire stripper to remove 3/8” insulation from each wire before inserting them into the corresponding wago clip.

Step 4

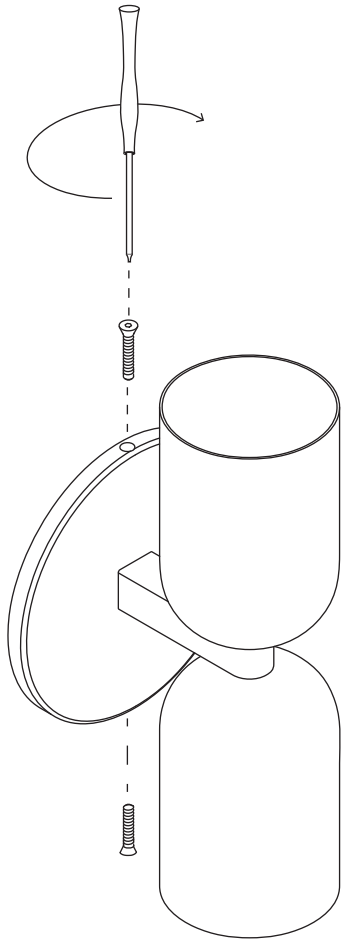

Align the holes of the backplate with the holes of the canopy cover. Secure them in place with the screwdriver found in the hardware pack.

Step 5

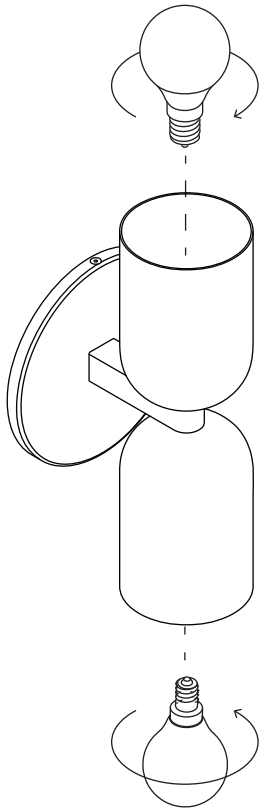

Screw the lightbulbs into the sockets.

Step 6

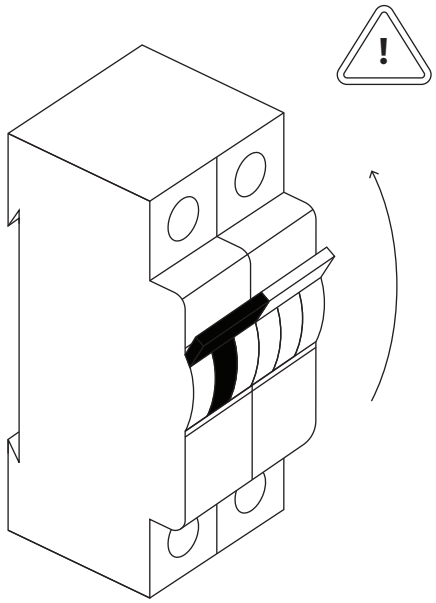

Turn the power back on at the main fuse box or circuit panel you disabled before installation. Turn on the light :)

Never use scouring pads or abrasive cleaning solutions. If it comes in a bottle, it is bad for your fixture. Instead, we recommend using soft microfiber cloths, which are gentler on our products and the planet.

For Metal: Wipe with a damp or dry microfiber cloth. Please note that our brass is unlaquered, and will darken naturally over time.

For Glass: Wipe clear or colored glass with a damp microfiber cloth. For sandblasted or etched glass, use a dry microfiber cloth. Removable glass shades can be washed carefully in a sink using warm or hot water.

For Ceramic: Wipe with a damp microfiber cloth. Do not submerge in water.

Return Policy

We accept returns for store credit only, minus a 15% restocking fee. We do not accept returns on pieces from the Handmade, Disc, Terra, or Flora series, on the Ceramic or Chromatic Glass Up Down Sconces, or on items that are not in their original condition. Custom and Rush orders are final sale. Please note that shipping charges are non-refundable.

To request a return, email sales@incommonwith.com within ten days of receiving your order. Requests must be approved before a return can be processed. Requests made after ten days will not be accepted.

All products that come in their own box, including but not limited to light bulbs and accessories, must be returned in their original, undamaged box as this is considered part of the product. Once installed, products are no longer eligible for return.

We reserve the right to reject any returned items that do not meet the above requirements. If your return is rejected you will be notified via email.