Mushroom Table Lamp

Technical Specifications
sales@incommonwith.com
+1 (917) 830-8700
incommonwith.com



Mushroom Table Lamp



Technical Specifications	Materials	Steel, glass
	Product weight	7.75 lbs
	Lead time	3 days
	Bulbs inlcuded (1)	E12 / 120 V / 4.0 W / 550 lm 2700 K / dimmable
	Dimmer	Integrated dimmer switch
	Cord Length	10 feet
	Max wattage	7 W
	Certifications	cULus listed, cETLus listed

Notes	1. A rotary dimmer switch is located on the base of the fixture. 2. This table lamp comes with a 10-foot black cord; length is not customizable.
Updated	January 19, 2026

Mushroom Table Lamp

Technical Drawings

Front View

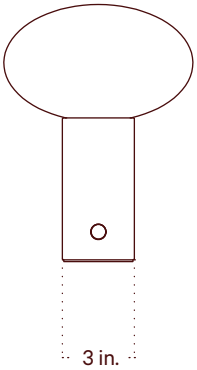

Top View

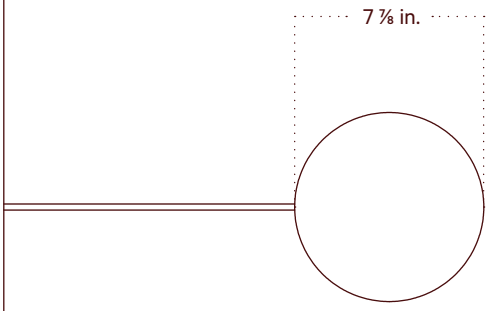

Side View

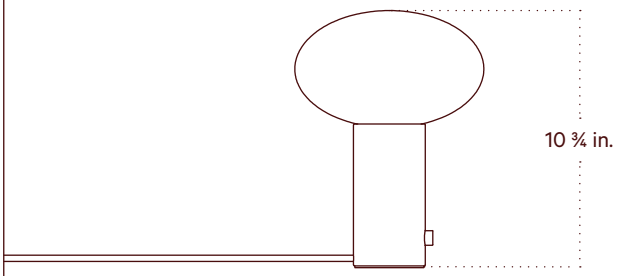

Isometric View

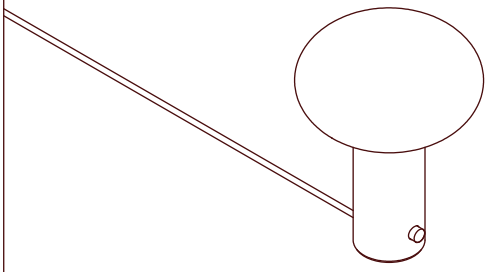

Mushroom Table Lamp, Table Mounted



Technical Specifications	Materials	Steel, glass
	Product weight	7.75 lbs
	Lead time	3 days
	Bulbs inlcuded (1)	E12 / 120 V / 4.0 W / 550 lm 2700 K / dimmable
	Dimmer	Integrated dimmer switch
	Cord Length	10 feet
	Max wattage	7 W
	Certifications	cULus listed, cETLus listed

Notes	1. This fixture is available as a table mounted plug-in with dimmer switch on the base or table mounted plug-in without a switch
Updated	January 19, 2026

Mushroom Table Lamp, Table Mounted

Technical Drawings

Front View

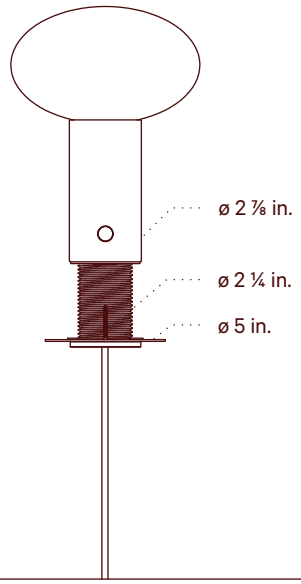

Top View

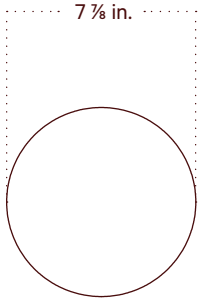

Side View

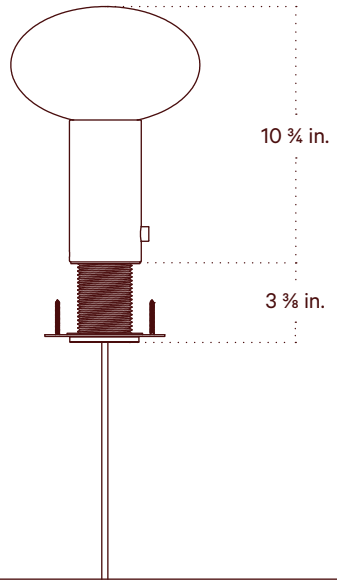

Isometric View

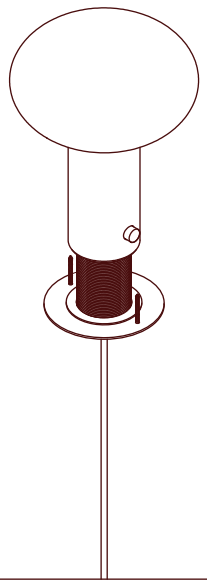

Mushroom Table Lamp, Table Mounted

Technical Drawings

Front View

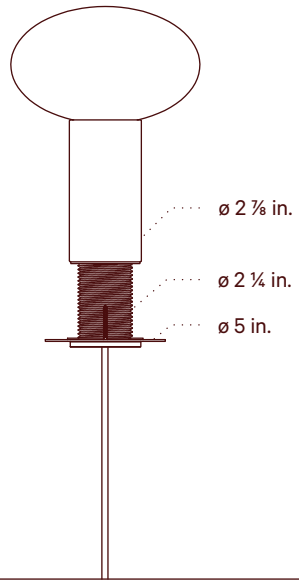

Top View

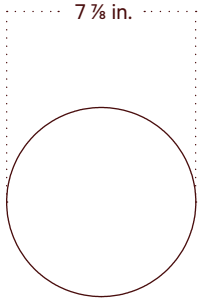

Side View

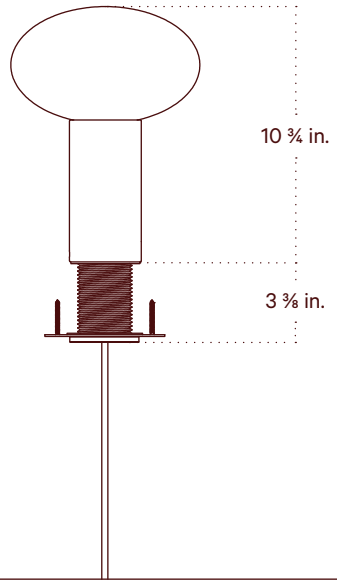

Isometric View

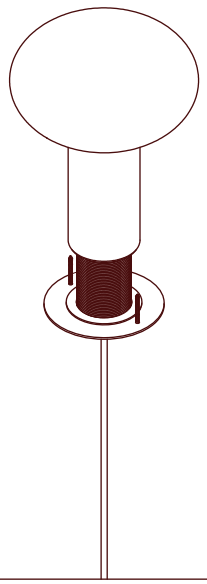

Finish Options

Brass, glass, and ceramic samples made or finished by hand may exhibit variability. Available for purchase at incommonwith.com/finishes.

Painted Metal



Black



Bone



Oxide Red



Reed Green



Peach